Plan

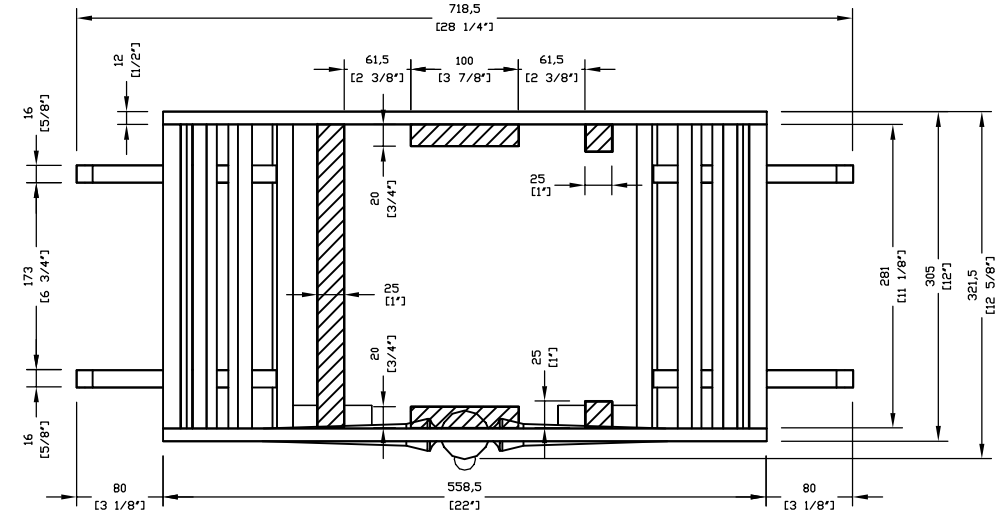

Perspective View

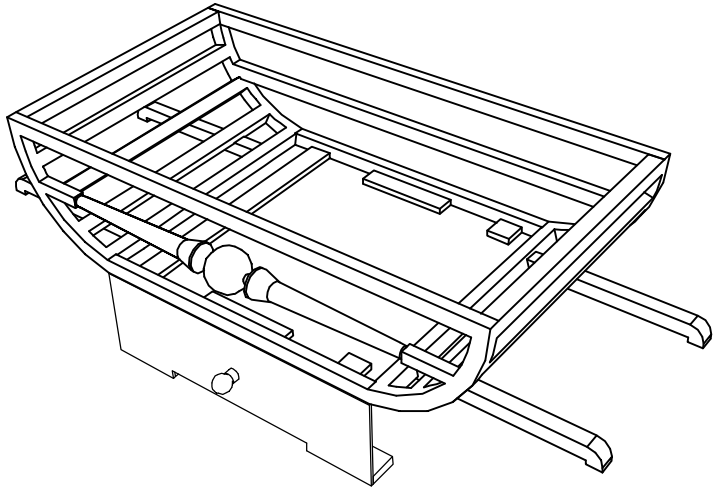

Front Elevation

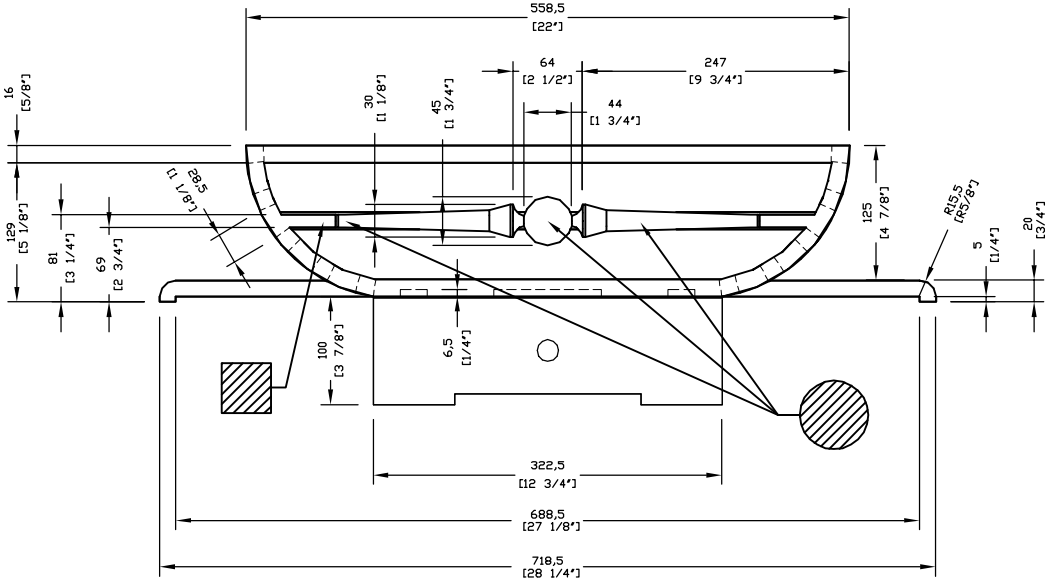

Side Elevation

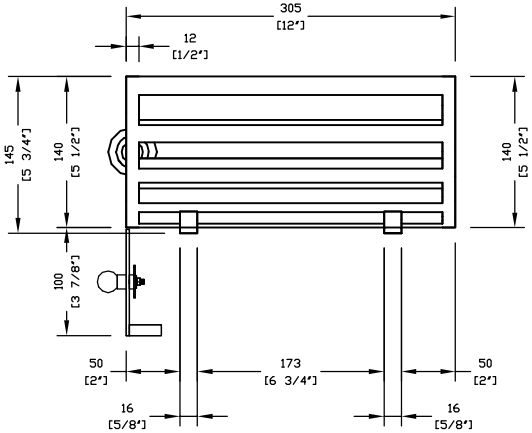

Morris Fire Basket for Dogs 22"
Drawing No.DGS0051

Date 24 April 2009

CHESNEY'S
Head Office: 194-202 Battersea Park Road, Battersea, London SW11 4ND
Telephone: 020 7627 1410 Fax: 020 7622 1078
Web Site: www.chesneys.co.uk E mail: sales@chesneys.co.uk