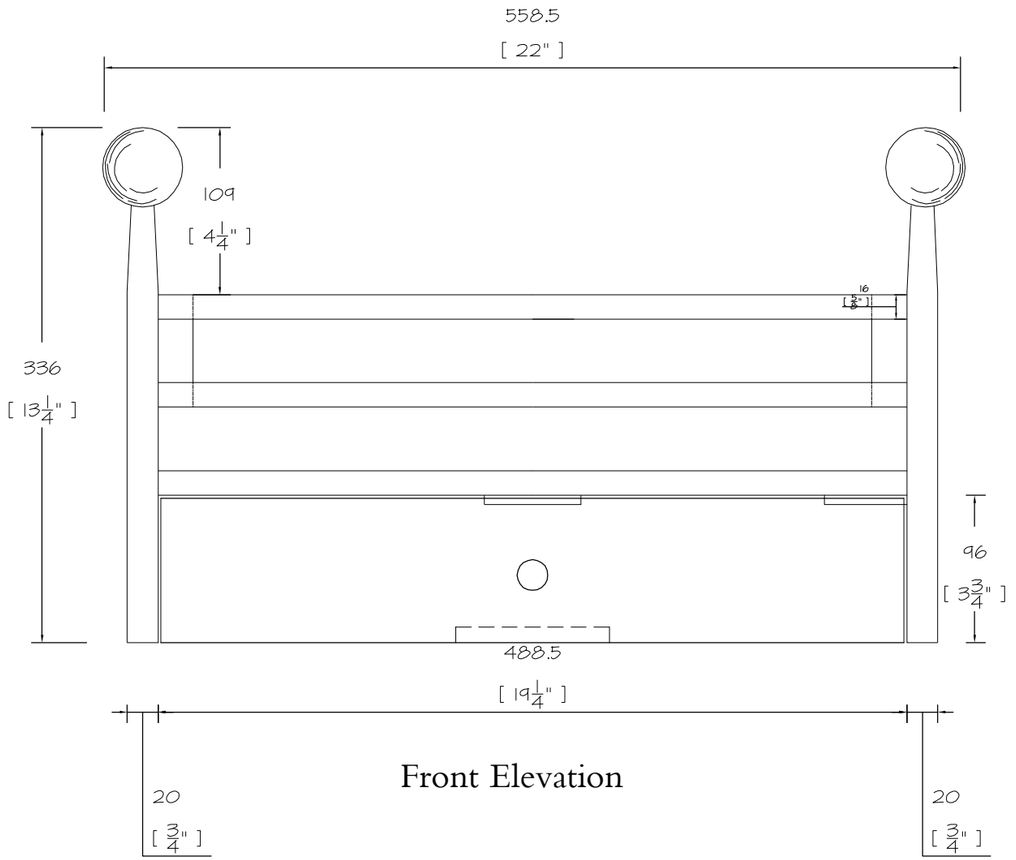

Front Elevation

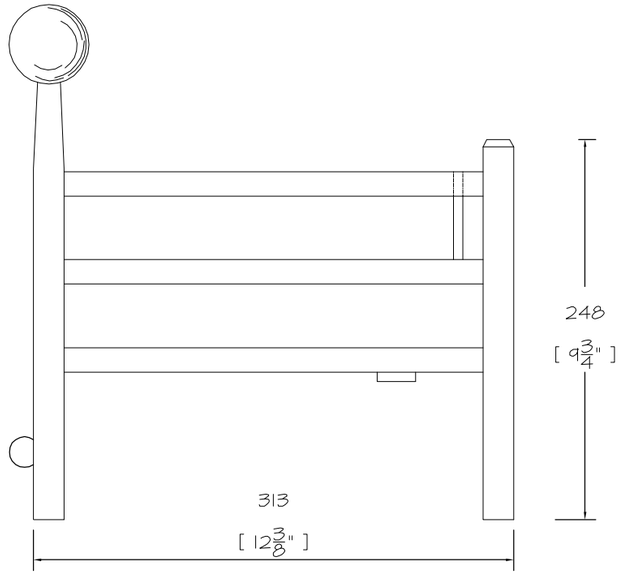

Side Elevation

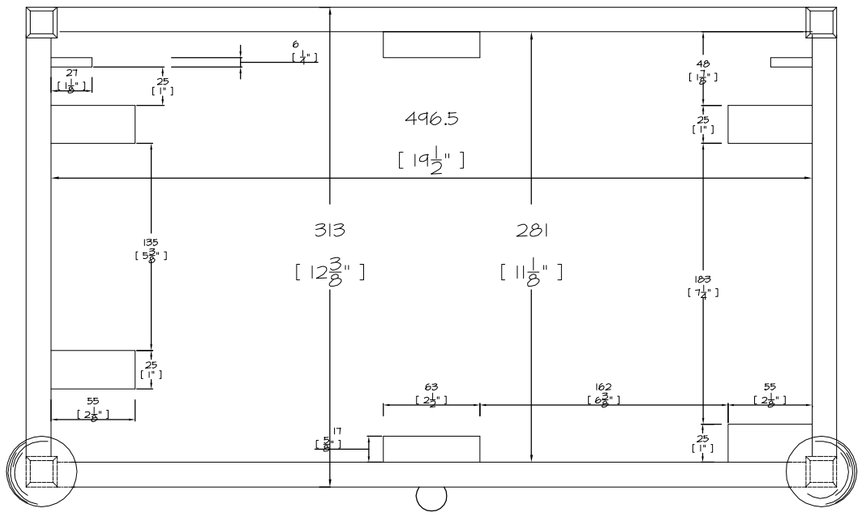

Plan

Popular Grate 22"

Date: 15/09/07 Scale 1:4

DRAWING NO. YT0072r1

CHESNEY'S

Head Office: 194-202 Battersea Park Road, Battersea, London SW11 4ND
Telephone: 020 7627 1410 Fax: 020 7622 1078
Site: www.chesneys.co.uk E mail: sales@chesneys.co.uk