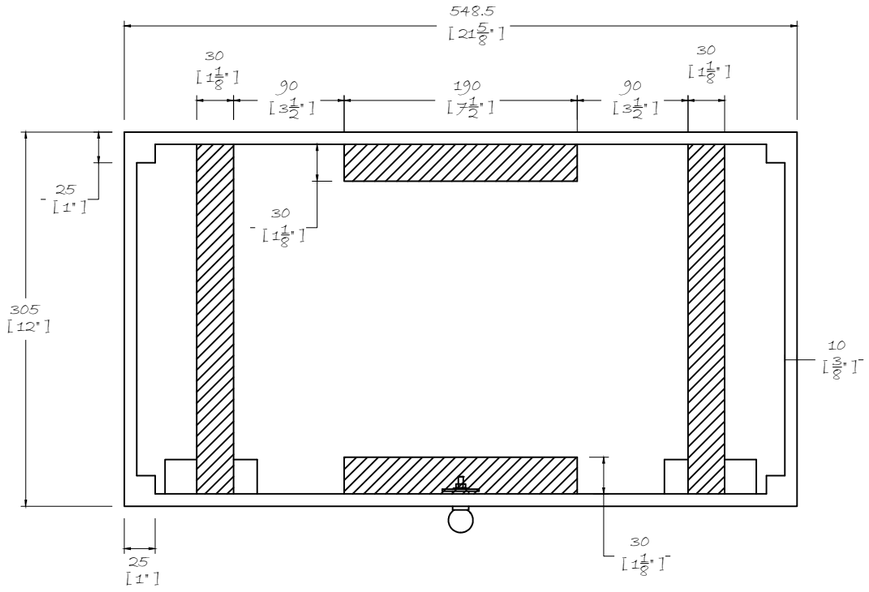

PLAN

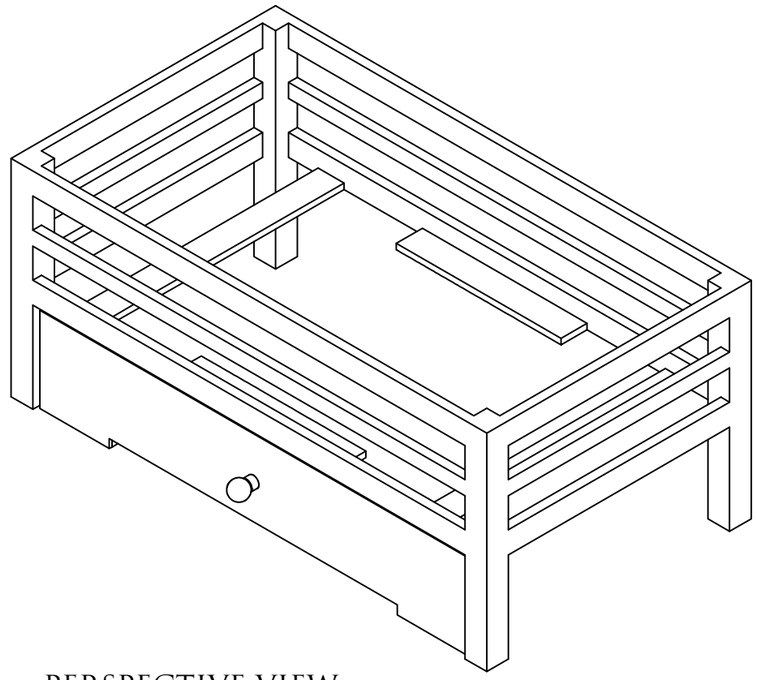

PERSPECTIVE VIEW

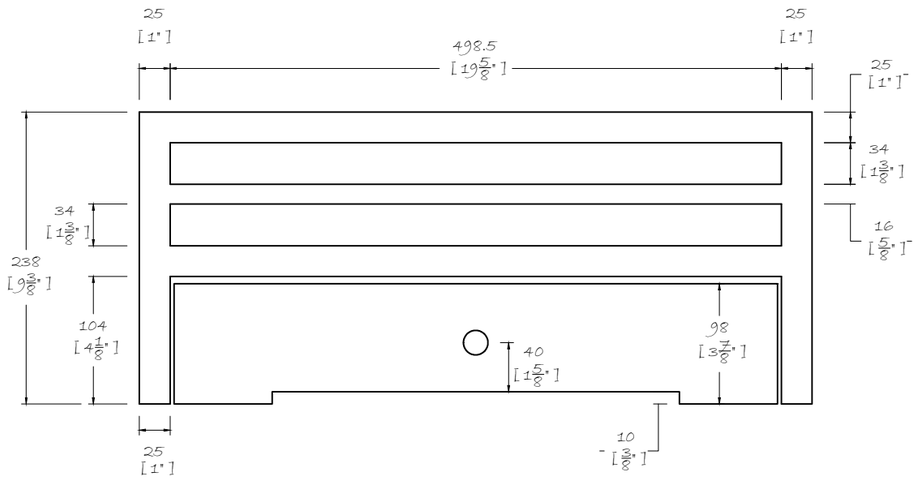

FRONT ELEVATION

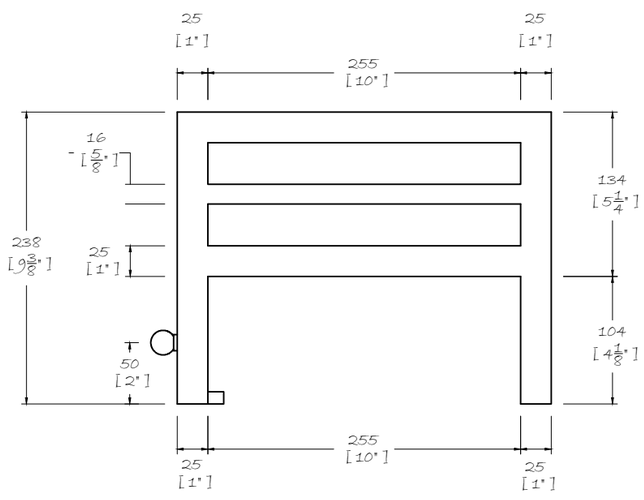

SIDE ELEVATION

CLIENT:

CDM Regulations - Design Risk Assessment

The size and shape of individual stones for this project have been designed to satisfy the overall design requirements for the building, bill of quantities or specific project specification.

All persons handling and installing such stones should be aware that there are risks associated with this type of work, which cannot be designed out.

Limestones & Marble are a natural material and may vary in texture, color and veining intensity.

Please consider a dimensional tolerance of $\frac{1}{8}$"

© CHESNEYS 2019

CHESNEYS

HEAD OFFICE:
194-202 BATTERSEA PARK ROAD. BATTERSEA. LONDON
TELEPHONE: +44 (0) 20 7627 1410

WEB SITE: WWW.CHESNEYS.CO.UK
E MAIL: SALES@CHESNEYS.CO.UK

BASKET:

SOHO
FREESTANDING
FIRE BASKET 22"

SPECIAL NOTES:

DRAWN BY:
LUIS VELA

DATE: 04/01/2019

SCALE: 1:5 @ A3

INVOICE NUMBER:

DRAWING NO.:

REV: